AN ROINN OIDEACHAIS
BRAINSE AN GHAIRMOIDEACHAIS

G.318

CERTIFICATE EXAMINATIONS FOR DAY VOCATIONAL COURSES, 1966

MECHANICAL DRAWING

THURSDAY, 16th JUNE - 10 a.m. to 12.30 p.m.

INSTRUCTIONS

(a) Not more than four questions may be attempted; two of these must be selected from Section I and two selected from Section II.

(b) The number of the question must be distinctly marked by the side of each answer.

(c) Work on one side of the paper only.

(d) All questions carry equal marks; a maximum of 5 marks will be awarded for accuracy and neatness of arrangement in respect of each question.

(e) Examination number must be distinctly marked on each sheet of paper used.

SECTION I

(Answer either 1 (A), 1 (B) or 1 (C) and any one other question from this section.)

1 (A). The drawing at Fig. 1A represents a woodwork joint. Make a full size drawing of the assembled joint showing:-

(a) an elevation looking in the direction of the arrow X,

(b) an end elevation looking in the direction of the arrow Y,

(c) a plan view projected from (a).

All dimensions required for making the joint should be shown on the completed drawing.

1 (B). The drawing at Fig. 1B represents a metalwork project.
Draw free-hand on the ⅛ inch squared paper supplied, the following views of the project in good proportion and correct projection:-

(a) an elevation,

(b) an end elevation,

(c) a plan projected from (a).

Show by means of properly drawn dimension lines the number of dimensions you would require to make the project.
(It is not necessary to give actual dimensions).

1 (C). The drawing at Fig. 1C represents a solid, cut and shaped to the dimensions given.
Make a full size drawing of this solid showing:-

(a) an elevation looking in the direction of the arrow X,

(b) an end elevation looking in the direction of the arrow Y,

(c) a plan view projected from (a).

All dimensions required for the shaping of the solid should be shown on the completed drawing.

2. The elevation of a regular hexagonal based pyramid is shown in Fig. 2.
The pyramid is cut by an inclined plane as indicated by the dimensions on the elevation.
Draw full size:-

(a) the plan and elevation of this sectioned pyramid,

(b) the surface development of the pyramid as sectioned, including the base, but omitting the development of the sloped top surface.
Index correctly each corner of the development.

3. The elevation and plan of a candle-holder are shown in Fig. 3.
Draw full size an ISOMETRIC or OBLIQUE projection of the candle-holder.
Candidates making the isometric version of this question are recommended to make the corner marked C, in the elevation, the lowest corner of the projection.
Candidates making the oblique version of the question are recommended to project the oblique lines to the left.

OVER →

4. The elevation and plan of an equilateral triangular prism are shown in Fig. 4.
(a) Reproduce full size this elevation and plan.
(b) Draw an auxilary elevation of this solid on the new ground line X' Y'.

The auxilary elevation is to be projected from the plan looking in the direction of the arrow F.
The new ground line X' Y' is drawn at right angles to the arrow F.
Indexing of the corners has been omitted.
Candidates attempting this question must adopt their own form of indexing.

SECTION II

(Answer any two questions from this section)

5. On the given straight line AB which measures 5½ inches long, mark in, in any selected position, a point such as the point C, indicated by the arrow in Fig. 5.
Locate the point D as illustrated.
It is required:-

(a) To describe a circle the circumference of which will pass through the point D, and touch the straight line AB, at the selected point C.

(b) To describe a second circle of ¾ inch radius so that its circumference touches the first circle externally and the line AB, tangentially.

The constructions for finding the centres of the required circles and the points of contact must be clearly shown.
(Marks will not be given for guess work.)

6. Reproduce to the dimensions and angles indicated, the figure shown in Fig. 6.
(Angle in a semi-circle)
It is required to produce a similar figure to the one constructed increasing the base line AB to measure 4¼ inches, and all other lines in the same proportion.
(Radial projection.)

7. Construct the triangle OAB to the data given in Fig. 7.
Construct an isosceles triangle equal in area to this triangle.
Construct a rectangle equal in area to the isosceles triangle, and prove mathematically that the area of the rectangle constructed equals the area of the triangle.

8. The minor axis of the ellipse shown in Fig. 8 measures 3¾ inches. The distance between the foci points F'F" on the major axis measures 4½ inches.
Determine the length of the major axis.
Draw one half of the ellipse by any method with which you are familiar.

9. Give the definition of each of the following and illustrate your answers with neat sketches.
(a) A rhombus. (b) A reflex angle. (c) A sector. (d) A polygon. (e) A chord.

SCRUDUICE CEASCAIS LINIOCC MEICNIÚIL 1966 SAIRM CÚRSAÍ LAE 5 318

SECTION I

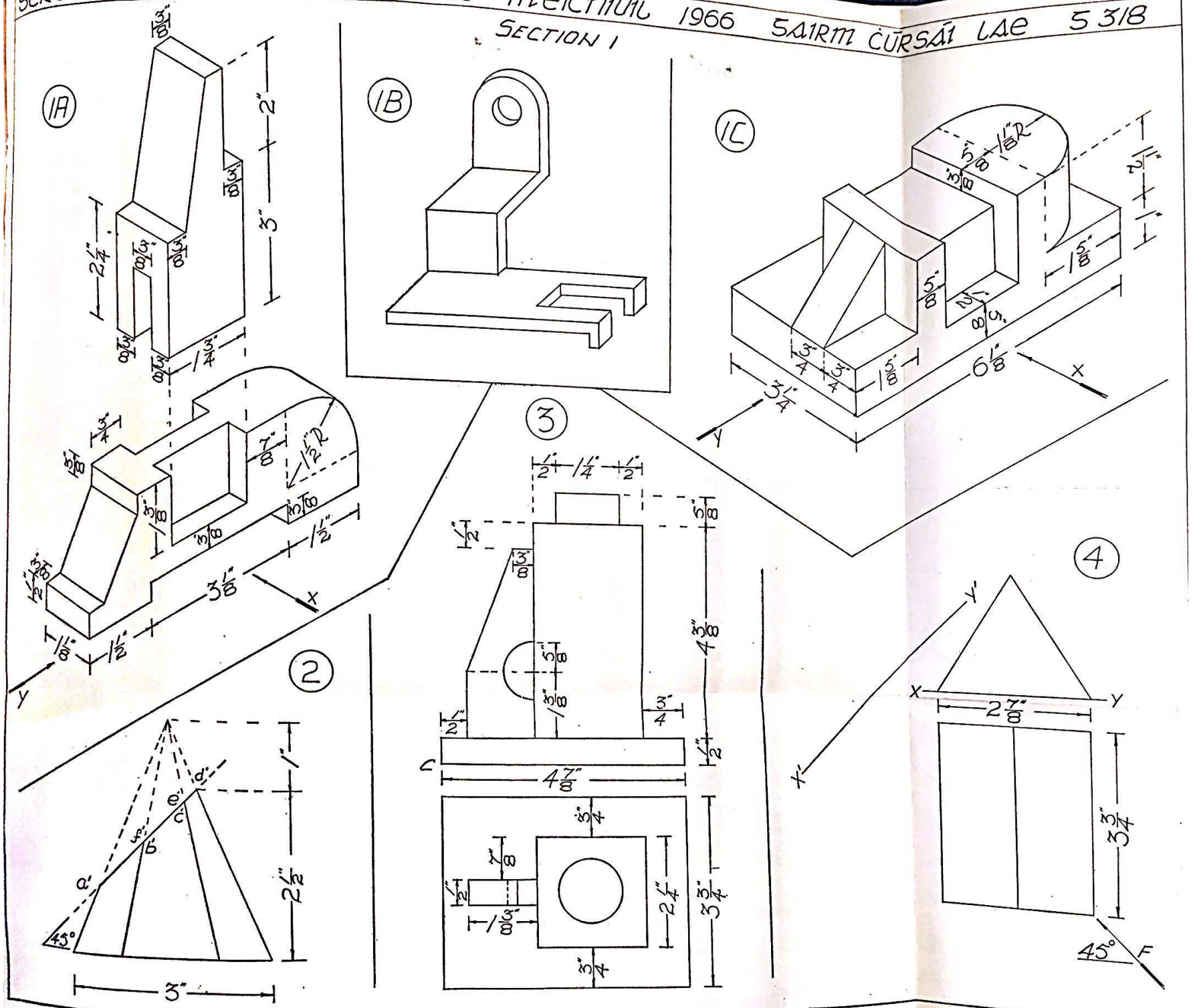

PLEASE TURN OVER FOR SECTION II

SECTION II

5

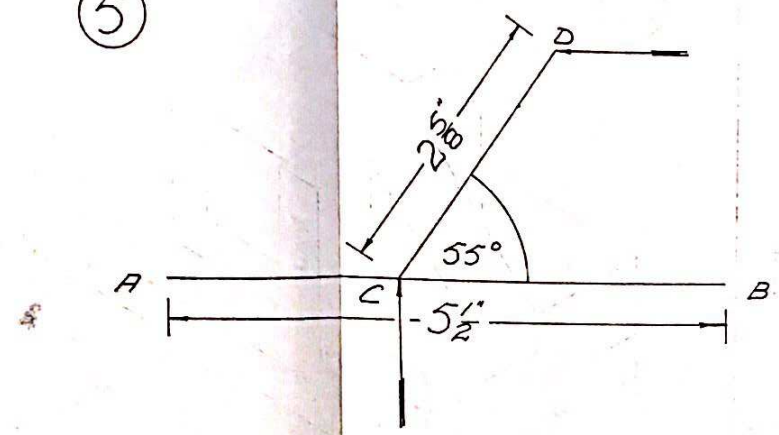

6

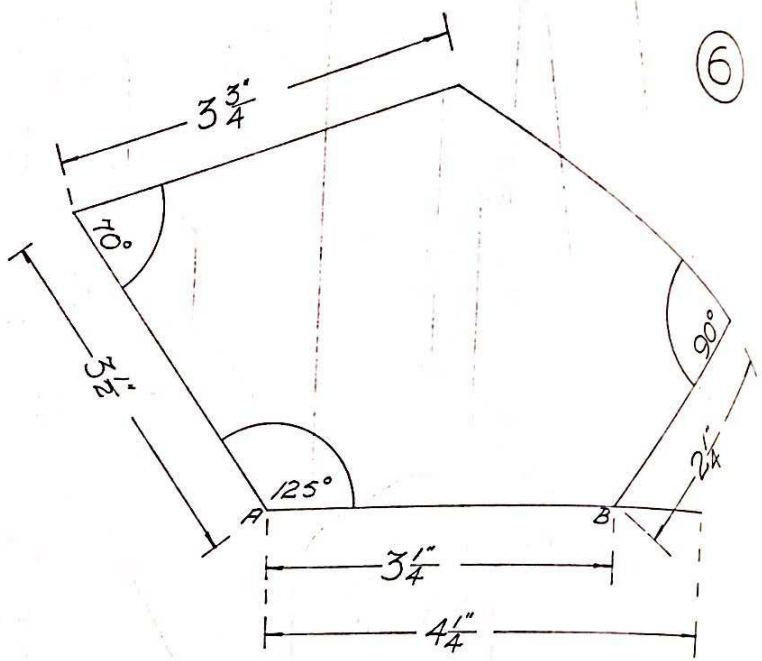

7

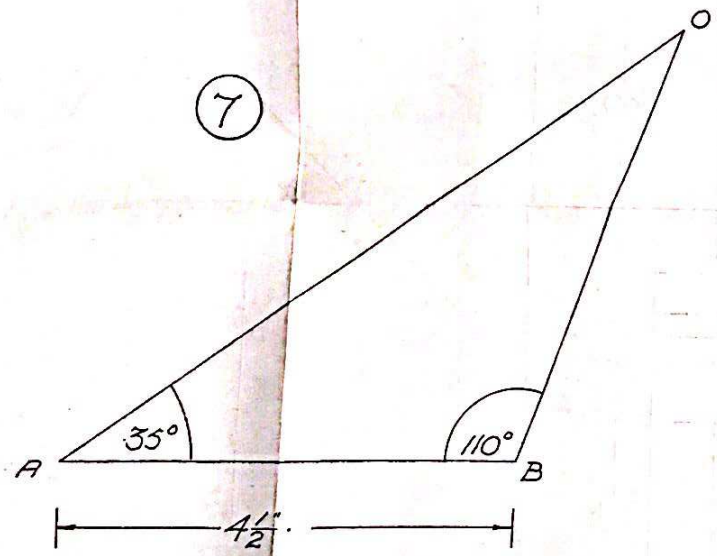
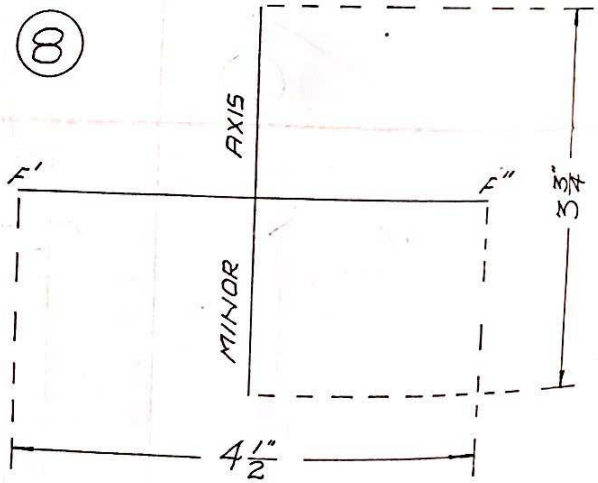
8